This module allows the CAT-1000 to autodetect CTCSS tones

COR is developed on board. Both PL and COR need to be present to trip COR output

All digital signals are active low

This module plugs into H4 on the CAT-1000

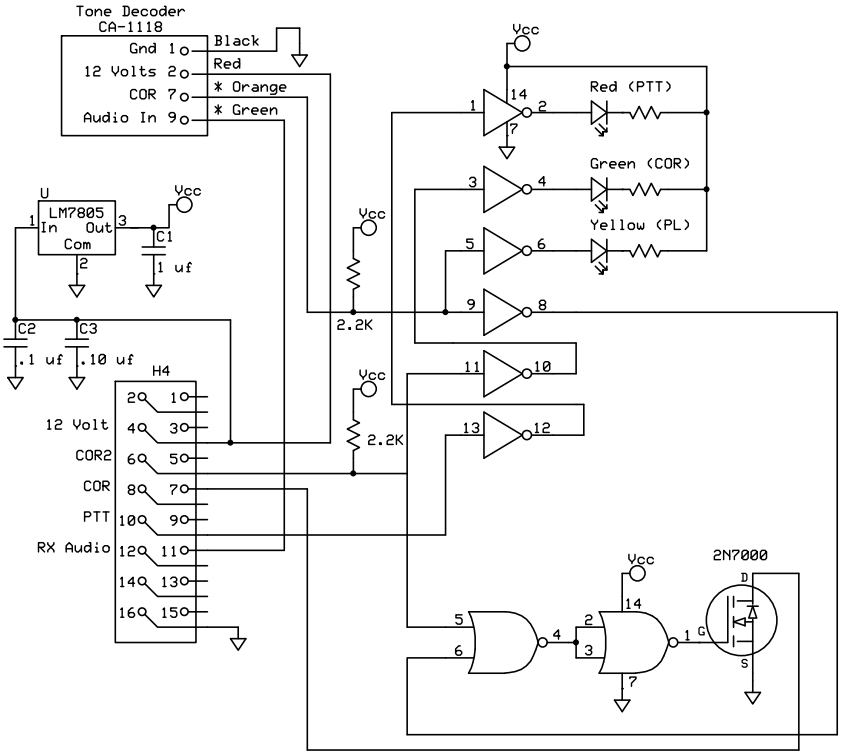

Note: * Colors might be different

Tone Decoder is Maxon CA-1118, Norcom NC-106 or equivalent
Q1 - 2N7000
U1 - 7414
U2 - 7402

OL Communications, Inc.		
CAT-1000 Digital Smart Module		
Joe Loucka AG4QC@Cyberbest.com	Rev 3.1.1D 11/22/2011	Page 1 of 1